A-SAFE

Retractable Barrier

PRH-1089-A-SAFE-20032025-1

Production

Dimensions (mm/inches)

- A 142 / 5⅝
- B 135 / 5⅓
- C 125.5 / 5
- D 138.5 / 5⅝

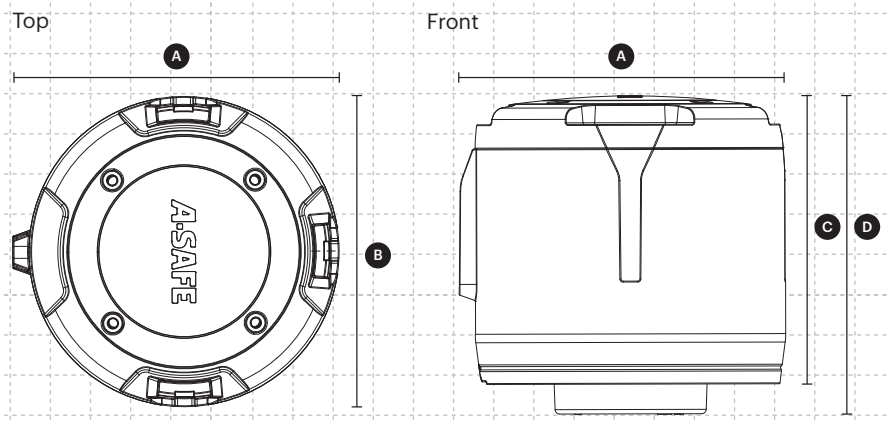

Colour Combinations

Standard

Standard Black
RAL 9005*
PANTONE Black

*Please note that the RAL and PANTONE colours listed are the closest match to standard A-SAFE colours, but may not be exact matches of the actual product colour and should be used for guidance only.

Product Material

Housing – Polymer
Internal Cage – Zinc Plated Steel
Webbing – Polyester

Weight of product

Retractable Barrier - Single Unit
1.54 Kg / 3.4 lbs

Retractable Barrier Kits	
S-01-02-0066 - Retractable Barrier Carry Case Kit	7 Kg / 15.4 lbs
S-01-02-0068 - Retarctable Barrier Kit - Gen3 Post to Wall	2.77 Kg / 6.1 lbs
S-01-02-0067 - Retractable Barrier Kit - Gen3 Post to Post	3.21 Kg / 7 lbs
S-01-02-0072 - Retractable Barrier Kit - Wall to Wall	2.35 Kg / 5.2 lbs

Minimum order quantities

Only applicable when producing branded tape option.

Suitability

Environment

Internal and External use

ATEX Suitability

Not suitable in an explosive atmosphere

Vehicle Suitability

This is dependant on product application

Fit for purpose application

Pedestrian protection

Impact Zone
This is not an impact suitable product

Material Properties	
Temperature Range	-10°C to 50°C
Ignition Temperature	370°C to 390°C
Flash Point	350°C to 370°C
Toxicity	Not Hazardous
Chemical Resistance	Excellent - ISO/TR 10358
Weathering Stability (Grey Scale)	5/5*
Light Stability (Blue Wool Scale)	7/8**
Static Rating (Surface Resistivity)	10^{15} - 10^{16} Ω

* Weathering scale 1 is very poor and 5 is excellent ** Light stability scale 1 is very poor and 8 is excellent

Recycling Information			
Packaging	Retractable Barrier Unit	Internal Fixing Unit	Webbing (Polyester)
Mixed Recycled	7	40 FE	1 PET

Part Codes - Racking Kit

1. M-01-01-0141 - Post / Wall Fixing Unit x 2
2. S-01-02-0063 - Retractable Barrier Unit x 2
3. B-06-01-0002 - Magnet x 10
4. M-01-01-0144 - Racking Receiver Unit x 2
5. B-04-01-0214 - Case x 1

S-01-02-0066
Retractable Barrier
Carry Case Kit

Part Codes - Post to Wall Kit

1. S-01-02-0063 - Retractable Barrier Unit x 1
2. M-01-01-0142 - Post adaptor x 1
3. M-01-01-0141 - Post / Wall Fixing Unit x 1
4. M-01-01-0150 - Wall receiver unit x 1
5. M-01-01-0097 - Post adaptor strap x 2
6. B-02-02-0106 - Strap buckles x 2
7. B-02-02-0053 - Fixing screws pack x 1
8. B-02-02-0158 - 4.2 x 32mm screw x 6
9. B-05-01-0101 - Box outer x 1
10. B-05-01-0102 - Box inner x 1
11. 905-0048 - Fixings bag x 1

S-01-02-0068
Retarctable Barrier Kit -
Gen3 Post to Wall

Part Codes - Post to Post Kit

1. S-01-02-0063 - Retractable Barrier Unit x 1
2. M-01-01-0142 - Post adaptor x 2
3. M-01-01-0141 - Post / Wall Fixing Unit x 1
4. M-01-01-0150 - Wall receiver unit x 1
5. M-01-01-0097 - Post adaptor strap x 4
6. B-02-02-0106 - Strap buckles x 4
7. B-02-02-0053 - Fixing screws pack x 1
8. B-02-02-0158 - 4.2 x 32mm screw x 6
9. B-05-01-0101 - Box outer x 1
10. B-05-01-0102 - Box inner x 1
11. 905-0048 - Fixings bag x 1

S-01-02-0067
Retractable Barrier Kit -
Gen3 Post to Post

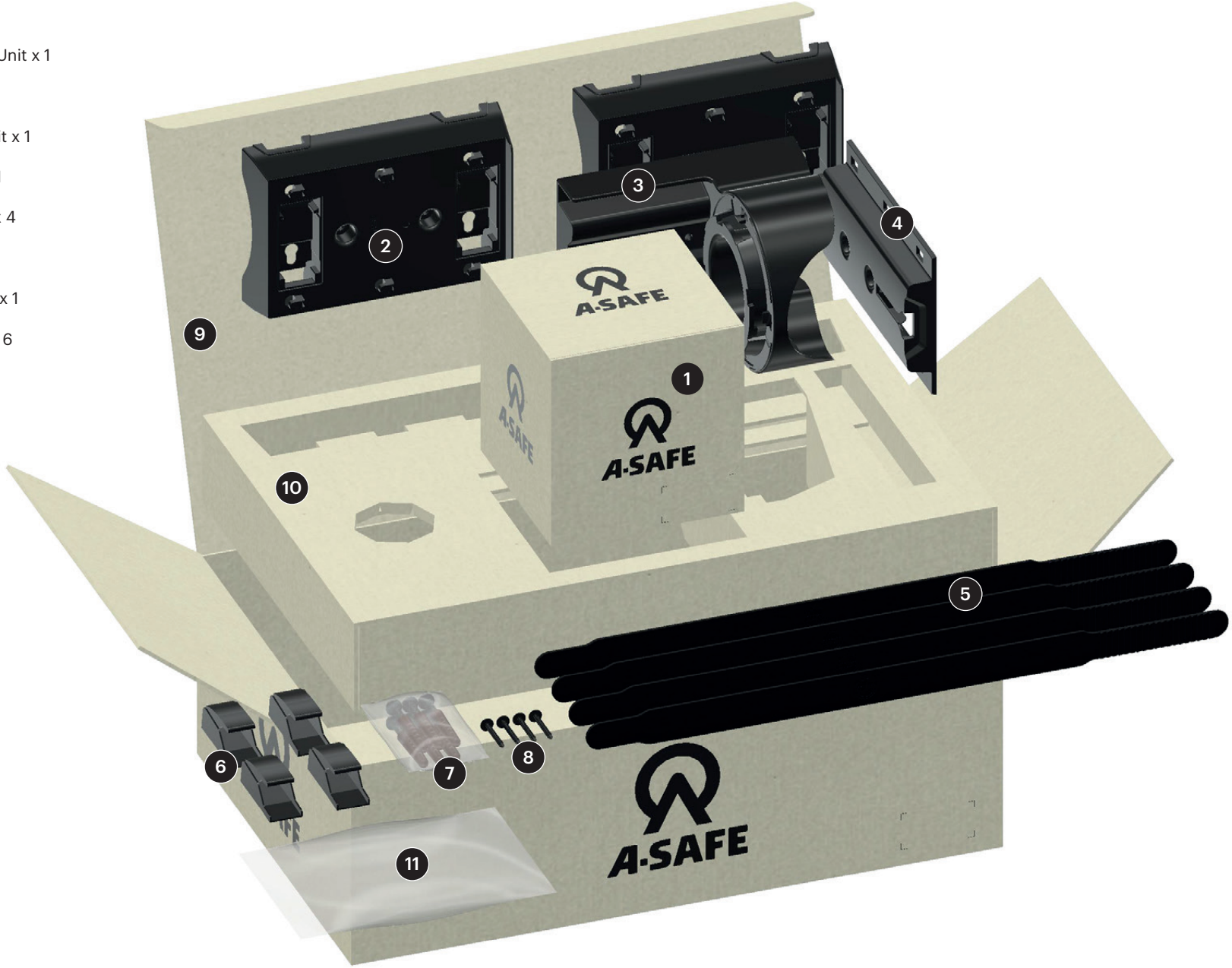

Part Codes - Wall to Wall Kit

1. S-01-02-0063 - Retractable Barrier Unit x 1
2. M-01-01-0141 - Post / Wall Fixing Unit x 1
3. M-01-01-0150 - Wall receiver unit x 1
4. B-02-02-0053 - Fixing screws packs x 2
5. B-05-01-0101 - Box outer x 1
6. B-05-01-0102 - Box inner x 1

S-01-02-0072
Retractable Barrier Kit
Wall to Wall

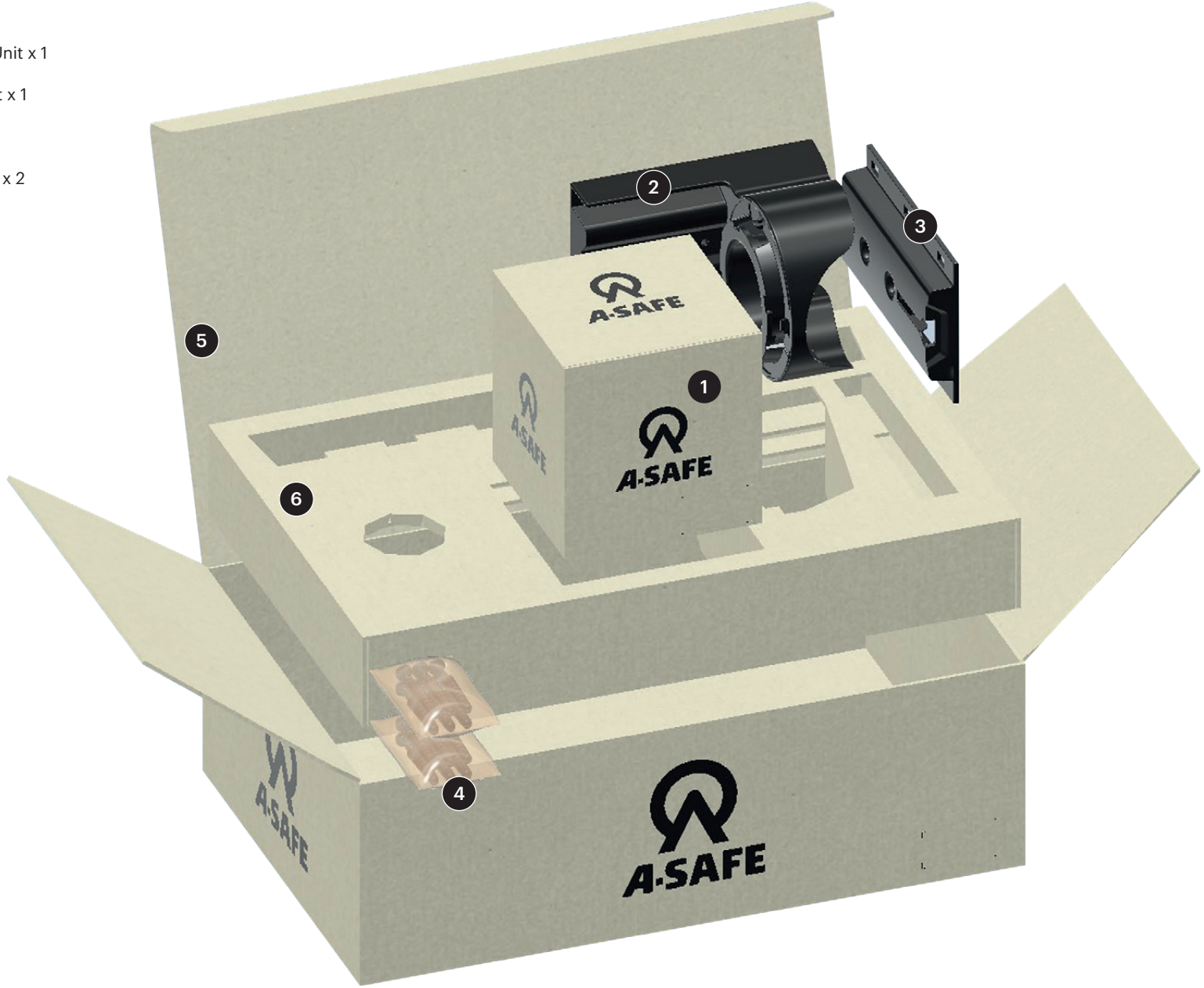

Data Sheets

CAD

Install Documents

If you have any questions please contact
the product management team at A-SAFE HQ
Product.Management@asafe.com

A-SAFE
PIONEERING WORKPLACE SAFETY

PRODUCTHUB

Document Reference	PRH-1089-A-SAFE-20032025-1
Document Description	Retractable Barrier
Date Created	April 2025
Author/s	Matthew Briggs
Checked by	Dylan Wilson / Jerry Budby
Approved by	Ben Allen
Revision	Version 1 - April 2025